12mm□□□□□□□□□□□□U□□□□□□□□

□□□□□□

12mm□□□□□□□□□□□□□□□□1100~1150°F□□□□□□□□□□12mm□□□□□□□□□□□□□□□□

□□□□□□□□□□U□□□□□

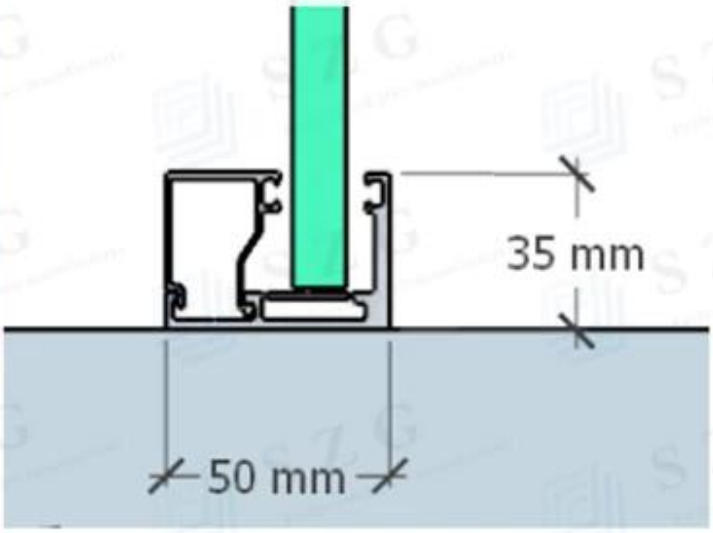
35 mm
50 mm

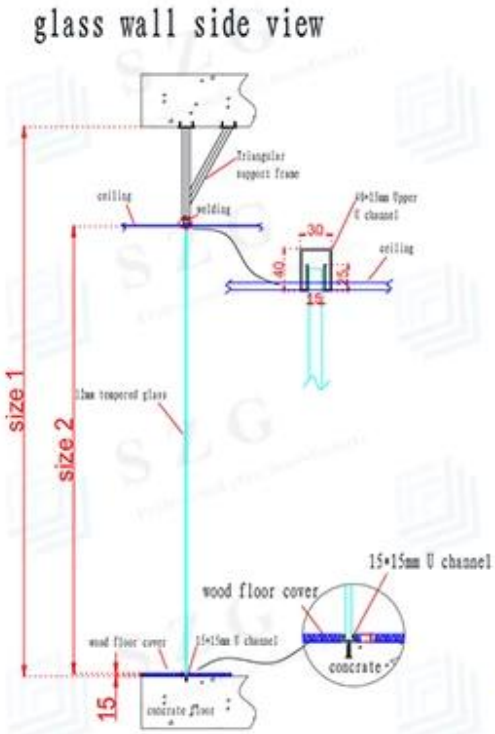
glass wall side view
Triangular support frame
ceiling
welding
40*15mm Upper U channel
30
40
5
15
ceiling
size 1
size 2
15mm tempered glass
15*15mm U channel
wood floor cover
concrete
wood floor cover
15*15mm U channel
15
concrete floor

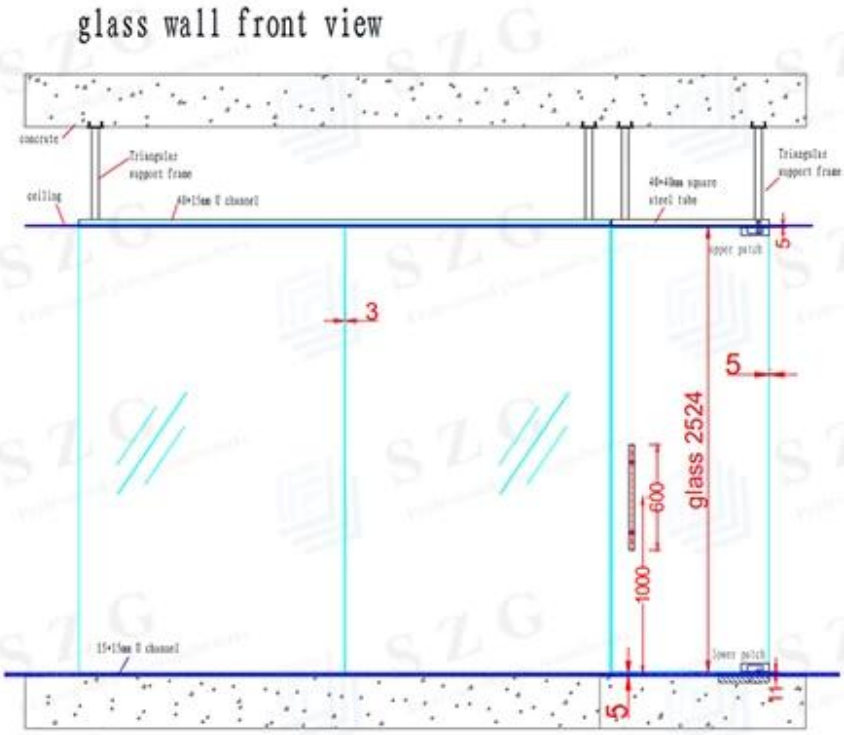
glass wall front view
concrete
Triangular support frame
ceiling
40*15mm U channel
40*40mm square steel tube
Triangular support frame
upper patch
5
3
5
glass 2524
600
1000
15*15mm U channel
lower patch
5
11

□□□

1.Anti□□□

□□□