11.52mm[illegible] [illegible] 2[illegible]5mm[illegible] [[illegible]] PVB[illegible]

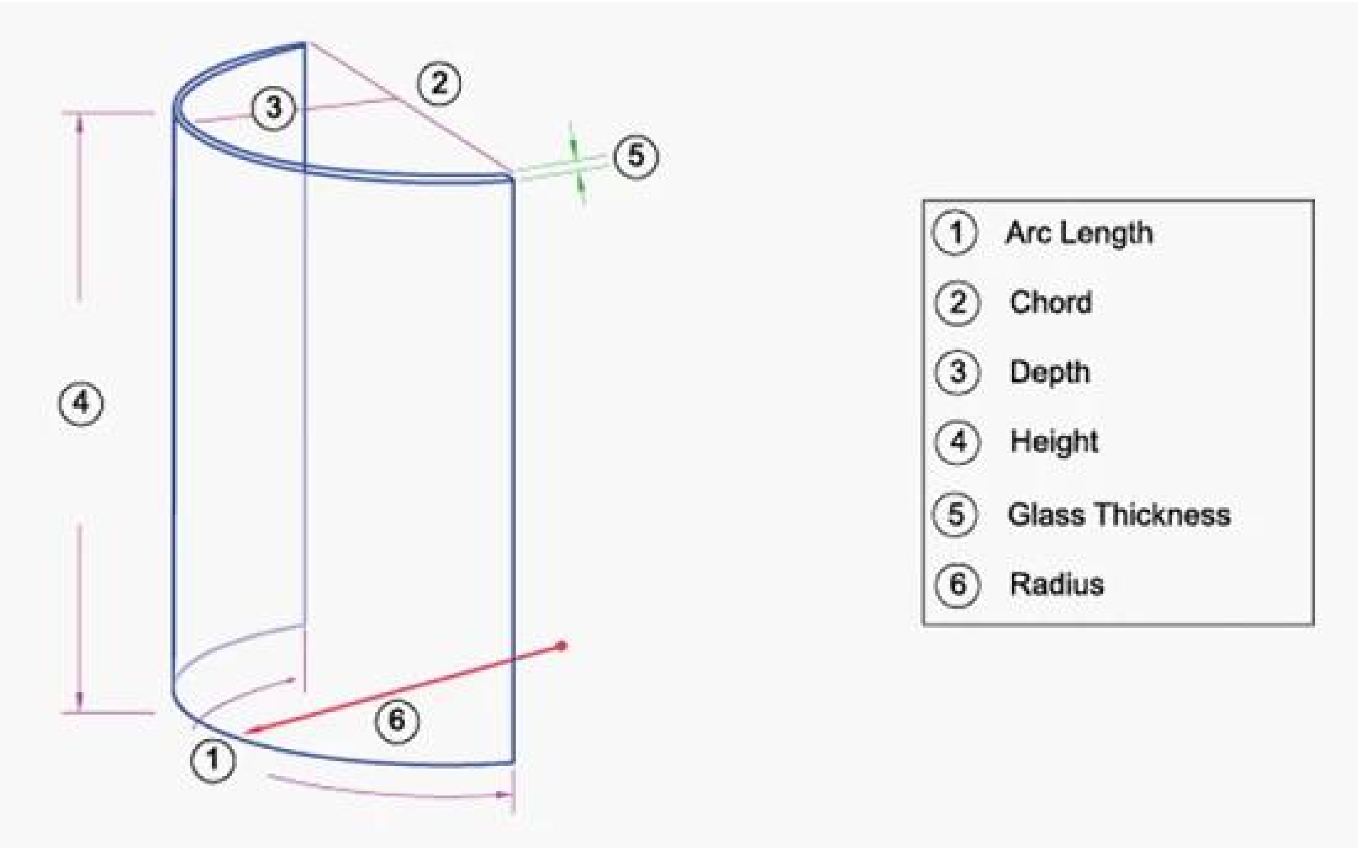

SZG[illegible]

1. SZG[illegible]

2. SZG[illegible]3300mm[illegible]440mm[illegible]5500mm[illegible]

3.[illegible]3[illegible]5[illegible]

4.[illegible]

[illegible]

5.[illegible]300℃[illegible]3[illegible]

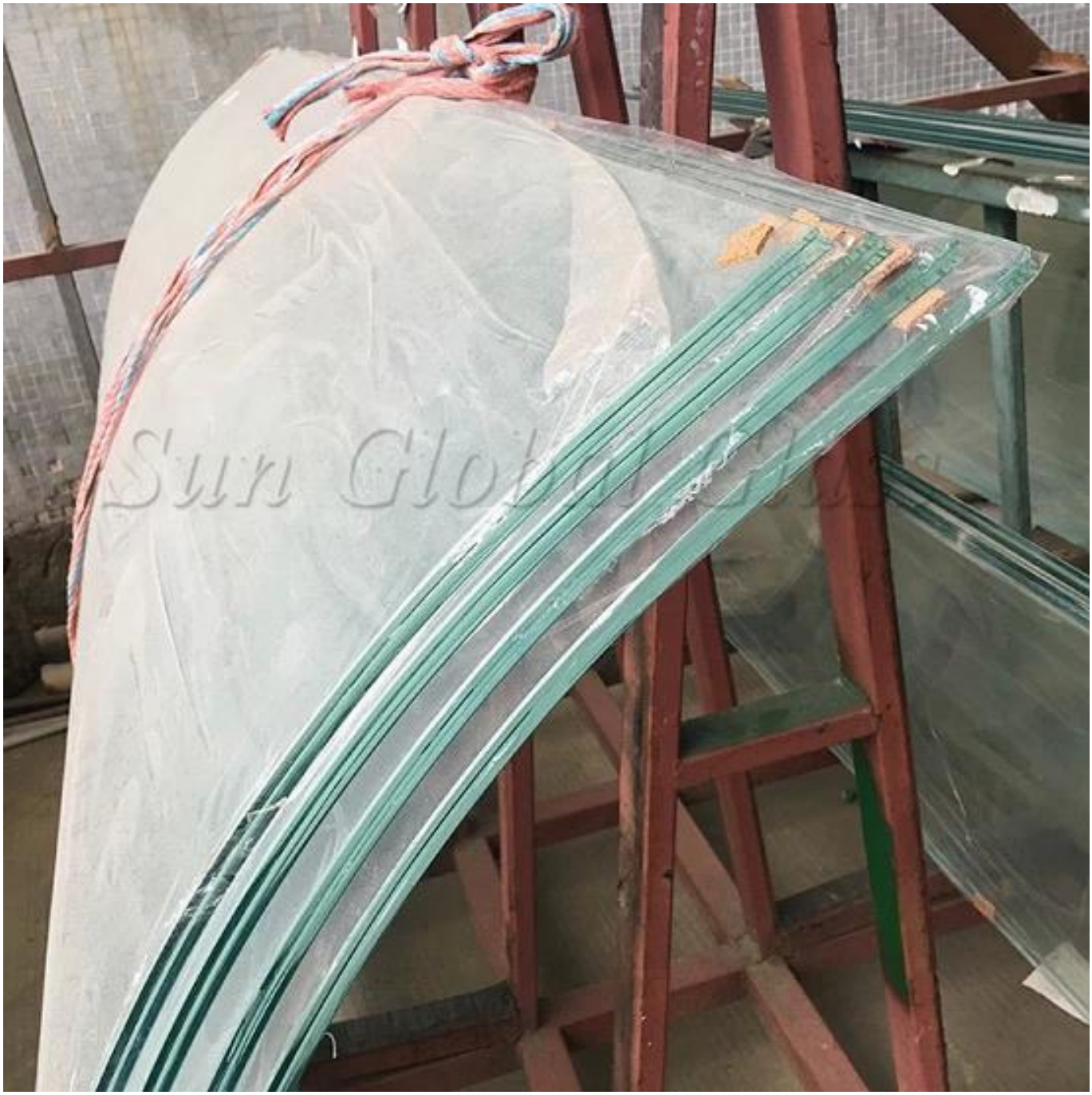
Sun Global Glass

1.

2. 1/10000

3.

91.5□□

SZG□□□□

1.□□□□□□□□□□□□□□□□□□□□□□□□□□□□□□□

2.□□□□□□□□□□□□□□□□□□□□□□□□

3. 50□□□□□□□□□ISO□CE□EN□□□□□□□□□□□□□□□□□□□

4.□□□□□□□□□□□□□□□□□□□□□□□□□□□□□□

Shenzhen Sun Global Glass Co., Limited is one of main building glass manufacturers in China. Our factory occupies 130,000 square meters equipped with 1000 skilled workers, 30 well-experienced, innovative technicians and advanced production machines.

As a CE qualified & ISO certified Manufacturer, We insist to offer superb quality building glass. In 2017. We got the certifications of EN12150, EN14449, BS6206, SGCC Safety Glass Standards.

Exhibition

Our Factory

Our Friends

□□□□□□□□□□□□□□□□

Florence Inn Hotel
Holiday Inn
Express
& Suites

Pestana Cascais Hotel

Bolivia UNESCO Museum

Mauritius AML Shopping Center

UK State-Of-The-Art Academy

Philippines Fortunehill

Vietnam Vo Trong Nghia

Poland Gliwice Metro Station